WP92

Part no.	Description Water pump	Pump. Speed	Ultimate press.	Full load power	Capacity	Intake port	Exhaust port	Weight
MVA 22.0071	MAD WP92 **24 V DC**	4500 rpm (without load)	1.3 bar	4 A	92 lt/min	Ø38 mm	Ø38 mm	1.7 kg

Part no.	Description Vacuum pump	Pump. speed	Ultimate press.	Power	Oil capacity	Intake port	Exhaust port	Weight
MVA 22.0070	**220 V AC**	140 L/min	1.33 x 10^{-1} Torr.	0.4 kW Full load	600 cm^3	P/F - 3/8" x 2 P/F - 1/4"	1/2" PT	16 kg

Due to copyright duplication of this catalogue or parts of it is prohibited without written consent of Multi Air Design.
Vanwege auteursrechten is het verboden deze catalogus of delen ervan zonder schriftelijke toestemming van Multi Air Design te dupliceren.

Part no.	Specifications TX valve
MVA 22.0032	5/8" - 18 UNF O / 3/8" incl. external equalizer R134a 1.5 ton (capillary)

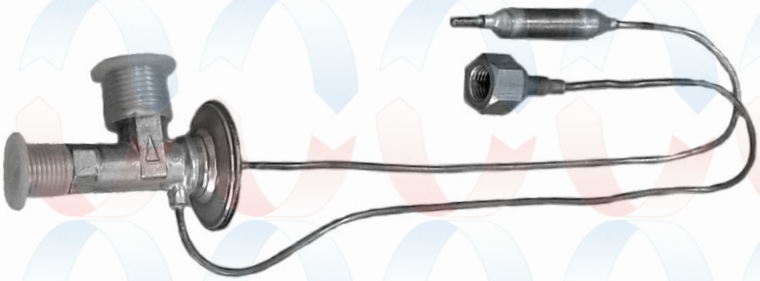

Part no.	Specifications TX valve
MVA 22.0036	5/8" - 18 UNF O / 3/8" incl. external equalizer R134a 1.5 ton (bulb)

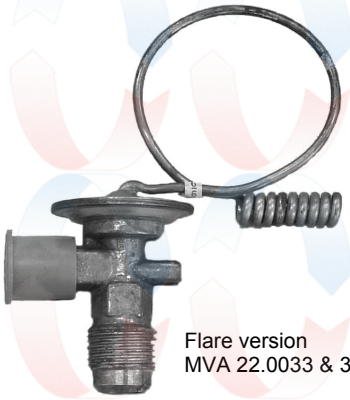

Flare version
MVA 22.0033 & 34

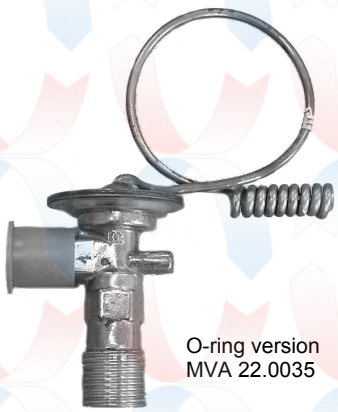

O-ring version
MVA 22.0035

Part no.	Specifications TX valve
MVA 22.0033	5/8" - 18 UNF Flare/3/8" Flare R134a 1.5 ton
MVA 22.0034	5/8" - 18 UNF Flare/3/8" Flare R134a 2 ton
MVA 22.0035	5/8" - 18 UNF O/3/8" O-ring R134a 2 ton Fujikoki

Due to copyright duplication of this catalogue or parts of it is prohibited without written consent of Multi Air Design.
Vanwege auteursrechten is het verboden deze catalogus of delen ervan zonder schriftelijke toestemming van Multi Air Design te dupliceren.

Part no.	Specifications
MVA 22.0040	Clamp for TX valve

MVA 22.0003

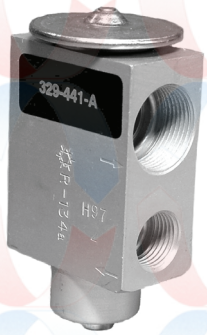

MVA 22.0007

Part no.	Specifications block valve	
MVA 22.0003	Eaton: 2.5 ton R134a TCDF OxO	
MVA 22.0007	Eaton: 1.5 ton inner thread R134a	no. 6/10 - no. 10/12 H97/329-441-A
MVA 22.0008	Egelhoff: 1.5 ton inner thread R134a	no. 6/10 - no. 10/12 TCD 2 320300
MVA 22.0009	Eaton: 2 ton inner thread R134a	no. 6/12 - no. 10/10 E 95/329-434-A

MVA 22.0004

MVA 22.0005

Part no.	Specifications
MVA 22.0004	Bottom plate for block valve
MVA 22.0005	Top plate for block valve
MVA 22.0006	Bolt set: 2x M5x35 and M6x15 and springwasher for block valve

Due to copyright duplication of this catalogue or parts of it is prohibited without written consent of Multi Air Design.
Vanwege auteursrechten is het verboden deze catalogus of delen ervan zonder schriftelijke toestemming van Multi Air Design te dupliceren.

Valves MVA

MVA 22.0021

MVA 22.0022

Part no.	Specifications	Current	Liquid gas
MVA 22.0021	AC Solenoid valve: 3/8" O-ring	12 V DC	R134a
MVA 22.0022	AC Solenoid valve: 3/8" O-ring	24 V DC	R134a

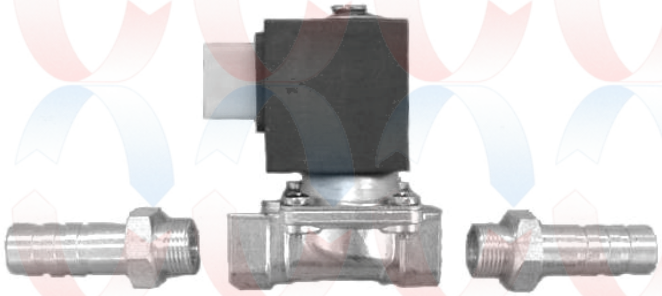

Part no.	Specifications	Current	Liquid
MVA 22.0024	Heater solenoid valve: 2 x 16 mm	12 V DC	Water
MVA 22.0025	Heater solenoid valve: 2 x 16 mm	24 V DC	Water

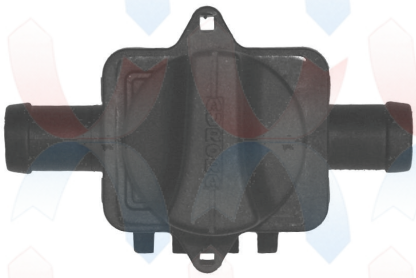

Part no.	Specifications	Dimensions (hose connection)
MVA 22.0045	Water valve type - 101, in / out incl knob hand-operated	2 x Ø16 mm

Due to copyright duplication of this catalogue or parts of it is prohibited without written consent of Multi Air Design.
Vanwege auteursrechten is het verboden deze catalogus of delen ervan zonder schriftelijke toestemming van Multi Air Design te dupliceren.

Valves MVA

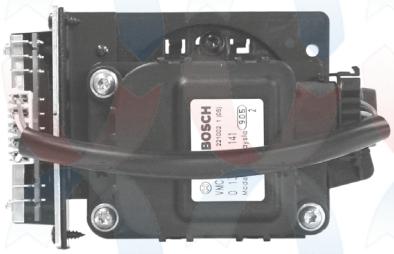

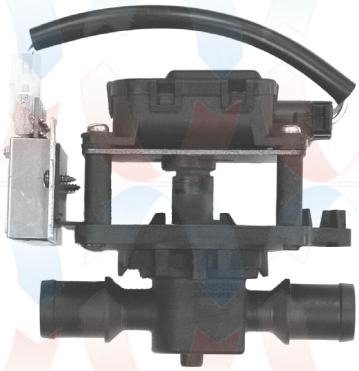

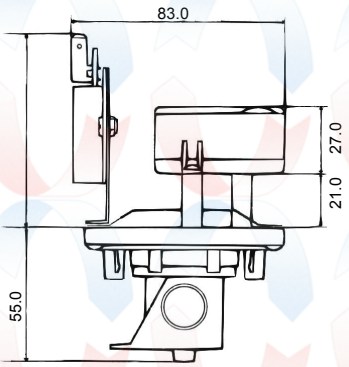

Part no.	Specifications	Dimensions (hose connection)
MVA 22.0073	Electronic **12 V** operated water valve control - complete model	2 x Ø22 mm
MVA 22.0072	Electronic **24 V** operated water valve control - complete model	2 x Ø22 mm

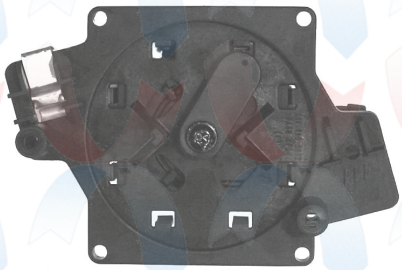

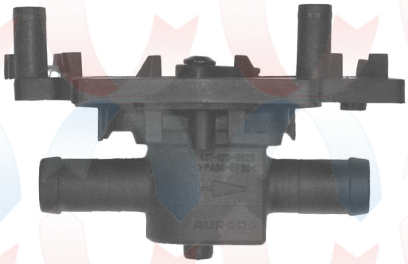

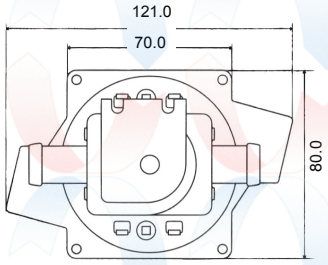

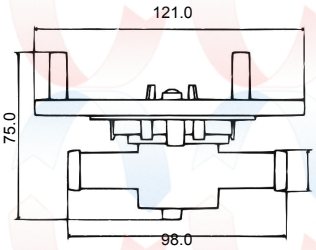

Part no.	Specifications	Dimensions (hose connection)
MVA 22.0041	Water valve 141, in / out bowden cable operated mechanical A	2 x Ø16 mm
MVA 22.0043	Water valve 142, in / out bowden cable operated mechanical B	2 x Ø16 mm
MVA 22.0044	Water valve type 143, in / out bowden cable operated mechanical C	2 x Ø16 mm
MVA 22.0046	Water valve type 144, in / out bowden cable operated mechanical D	2 x Ø16 mm

Due to copyright duplication of this catalogue or parts of it is prohibited without written consent of Multi Air Design.
Vanwege auteursrechten is het verboden deze catalogus of delen ervan zonder schriftelijke toestemming van Multi Air Design te dupliceren.

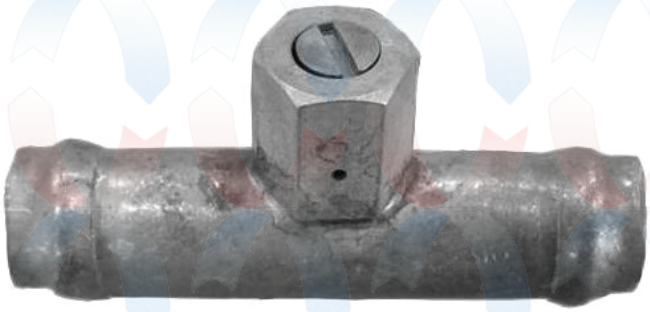

Part no.	Specifications heater splicer	
MVA 22.0051	with valve Ø12 mm	Copper
MVA 22.0052	with valve Ø16 mm	Copper
MVA 22.0053	with valve Ø19 mm	Copper
MVA 22.0054	with valve Ø22 mm	Copper

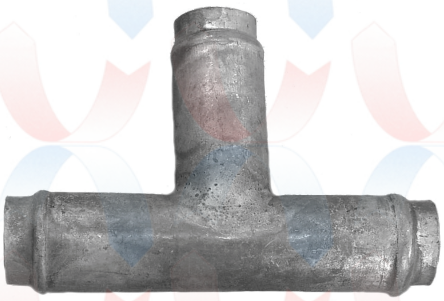

Part no.	Specifications T-splicer	
MVA 22.0055	Ø12 mm	Copper
MVA 22.0056	Ø16 mm	Copper
MVA 22.0057	Ø19 mm	Copper
MVA 22.0058	Ø22 mm	Copper

Due to copyright duplication of this catalogue or parts of it is prohibited without written consent of Multi Air Design.
Vanwege auteursrechten is het verboden deze catalogus of delen ervan zonder schriftelijke toestemming van Multi Air Design te dupliceren.

MVA 22.0060

Part no.	Specifications
MVA 22.0060	Tool for removing R12 and R134a valve core

MVA 22.0012

Part no.	Specifications
MVA 22.0012	Schräder valve (complete)

MVA 22.0013

Part no.	Specifications
MVA 22.0013	Valve core R12

MVA 22.0014

Part no.	Specifications
MVA 22.0014	Valve core R134a

MVA 22.0015
high version

MVA 22.0016
Low version

Part no.	Specifications
MVA 22.0015	Charge valve high for compressor R134a male
MVA 22.0016	Charge valve low for compressor R134a male

Due to copyright duplication of this catalogue or parts of it is prohibited without written consent of Multi Air Design.
Vanwege auteursrechten is het verboden deze catalogus of delen ervan zonder schriftelijke toestemming van Multi Air Design te dupliceren.